IPC-T249HA
4 MP ColorVu Fixed Turret Network Camera

Hikvision ColorVu technology provides 24/7 vivid colorful images with F1.0 advanced lenses and high performance sensors. F1.0 super-aperture collects more light to produce brighter images. Advanced sensor technology can vastly improve the utilization of available light.

- High quality imaging with 4 MP resolution
- 24/7 colorful imaging
- Support Human and Vehicle Detection
- Water and dust resistant (IP67)
- Efficient H.265+ compression technology

▪ Specification

Camera	
Image Sensor	1/3" Progressive Scan CMOS
Max. Resolution	2560 × 1440
Min. Illumination	Color: 0.001 Lux @ (F1.0, AGC ON), 0 Lux with light
Shutter Time	1/3 s to 1/100,000 s
Day & Night	24/7 color imaging
Angle Adjustment	Pan: 0° to 360°, tilt: 0° to 75°, rotate: 0° to 360°
Lens	
Lens Type	Fixed focal lens, 2.8 and 4 mm optional
Focal Length & FOV	2.8 mm, horizontal FOV: 96°, vertical FOV: 52°, diagonal FOV: 113° 4 mm, horizontal FOV: 75°, vertical FOV: 40°, diagonal FOV: 89°
Lens Mount	M12
Iris Type	Fixed
Aperture	F1.0
Depth of Field	2.8 mm: 2 m to ∞ 4 mm: 2.7 m to ∞
DORI	
DORI	2.8 mm, D: 64 m, O: 25 m, R: 12 m, I: 6 m 4 mm, D: 82 m, O: 32 m, R: 16 m, I: 8 m
Illuminator	
Supplement Light Type	White Light
Supplement Light Range	Up to 30 m
Smart Supplement Light	Yes
Video	
Main Stream	50 Hz: 20 fps (2560 × 1440) 25 fps (1920 × 1080, 1280 × 720) 60 Hz: 20 fps (2560 × 1440) 24 fps (1920 × 1080, 1280 × 720)
Sub-Stream	50 Hz: 25 fps (1280 × 720, 640 × 480, 640 × 360) 60 Hz: 24 fps (1280 × 720, 640 × 480, 640 × 360)
Video Compression	Main stream: H.265+/H.265/H.264+/H.264, Sub-stream: H.265/H.264/MJPEG
Video Bit Rate	32 Kbps to 8 Mbps
H.264 Type	Baseline Profile, Main Profile, High Profile
H.265 Type	Main Profile
Bit Rate Control	CBR, VBR
Region of Interest (ROI)	1 fixed region(s) for main stream
Network	
Protocols	TCP/IP, ICMP, DHCP, DNS, HTTP, RTP, RTSP, NTP, IGMP, IPv6, UDP, QoS, FTP, SMTP
Simultaneous Live View	Up to 6 channels
API	Open Network Video Interface (Profile S, Profile T), ISAPI, SDK
User/Host	Up to 32 users 3 user levels: administrator, operator, and user

Security	Password protection, complicated password, watermark, basic and digest authentication for HTTP, WSSE and digest authentication for Open Network Video Interface, security audit log, host authentication (MAC address)
Client	iVMS-4200, HiLookVision
Web Browser	Plug-in required live view: IE 10, IE 11 Local service: Chrome 57.0+, Firefox 52.0+
Image	
Wide Dynamic Range (WDR)	120 dB
SNR	≥ 52 dB
Day/Night Switch	Day, Night, Auto, Schedule
Image Enhancement	BLC, HLC, 3D DNR
Image Settings	Rotate mode, saturation, brightness, contrast, sharpness, gain, white balance, adjustable by client software or web browser
Privacy Mask	4 programmable polygon privacy masks
Interface	
Ethernet Interface	1 RJ45 10 M/100 M self-adaptive Ethernet port
Event	
Basic Event	Motion detection (support alarm triggering by specified target types (human and vehicle)), video tampering alarm, exception
Linkage	Upload to FTP, send email, notify surveillance center, trigger capture
General	
Power	12 VDC ± 25%, 0.4 A, max. 5 W, Ø5.5 mm coaxial power plug PoE: 802.3af, Class 3, 36 V to 57 V, 0.2 A to 0.15 A, max. 6.5 W
Material	Metal & Plastic
Dimension	Ø112 mm × 88.4 mm (Ø4.4" × 3.5")
Package Dimension	150 mm × 150 mm × 141 mm (5.9" × 5.9" × 5.6")
Weight	Approx. 370 g (0.8 lb.)
With Package Weight	Approx. 600 g (1.3 lb.)
Storage Conditions	-30 °C to 60 °C (-22 °F to 140 °F). Humidity 95% or less (non-condensing)
Startup and Operating Conditions	-30 °C to 60 °C (-22 °F to 140 °F). Humidity 95% or less (non-condensing)
Language	English, Ukrainian
General Function	Heartbeat, anti-banding, mirror, password protection, password reset via email
Approval	
EMC	FCC: 47 CFR Part 15, Subpart B CE-EMC: EN 55032: 2015, EN 61000-3-2: 2019, EN 61000-3-3: 2013 + A1: 2019, EN 50130-4: 2011 +A1: 2014 RCM: AS/NZS CISPR 32: 2015 KC: KN32: 2015, KN35: 2015
Safety	CB: IEC 62368-1: 2014 + A11 CE-LVD: EN 62368-1: 2014/A11: 2017
Environment	CE-RoHS: 2011/65/EU WEEE: 2012/19/EU Reach: Regulation (EC) No 1907/2006
Protection	IP67: IEC 60529-2013

▪ Available Model

IPC-T249HA (2.8/4 mm)

▪Dimension

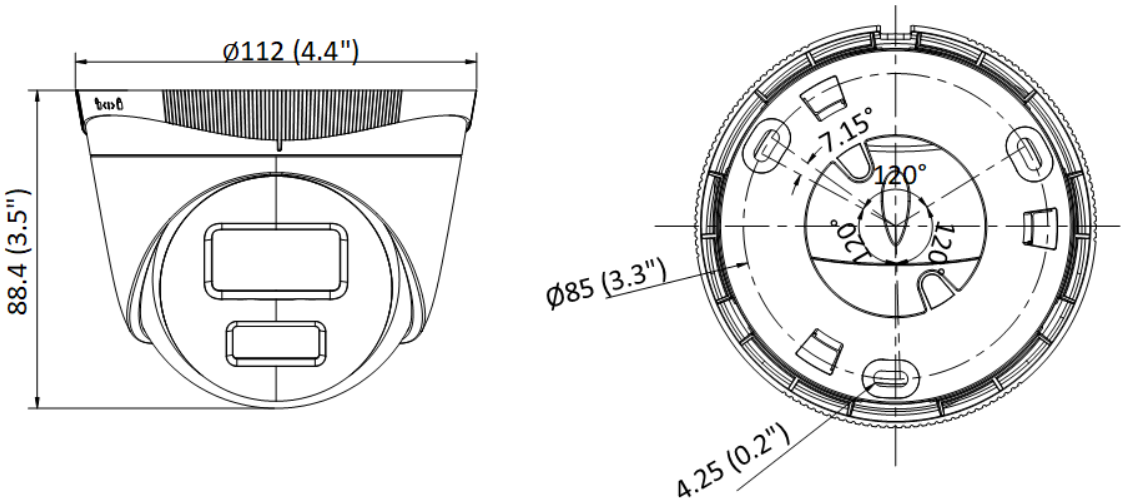

Unit: mm (inch)

▪ Accessory

▪Optional

PM Vertical Pole Mount	WML+PC130T Wall Mount	CB130T Junction Box	ABM Inclined Ceiling Junction Box	CM Corner Mount

Headquarters
No.555 Qianmo Road, Binjiang District,
Hangzhou 310051, China
T +86-571-8807-5998
Technical Support: support@hikvision.com

Follow us on social media to get the latest product and solution information.

Hikvision HikvisionHQ HikvisionHQ Hikvision_Global Hikvision Corporate Channel hikvisionhq

©Hikvision Digital Technology Co., Ltd. 2022 I Data subject to change without notice I